OCP SUMMIT

October 1-2
2018
Amsterdam

OPEN. FOR BUSINESS

Project Cerberus Hardware Security

Bryan Kelly / Principal Firmware Eng Manager
Microsoft Azure Cloud Hardware Infrastructure
Yigal Edery / Principal Program Manager
Microsoft Azure Security

Talk Outline

- Firmware Security for the Cloud
- Current State of the Industry
- Project Cerberus deconstruct
- Open Compute Security Project

OCP Security Context

“Rogues are very keen in their profession, and know already much more than we can teach them” -- Alfred Charles Hobbs, 1851

Open Compute Security Project was announced in February 2018

Microsoft and Google selected to serve as co-chairs, many companies contribute

Community focused on advancing platform hardware and firmware security

The Firmware Security Challenge…

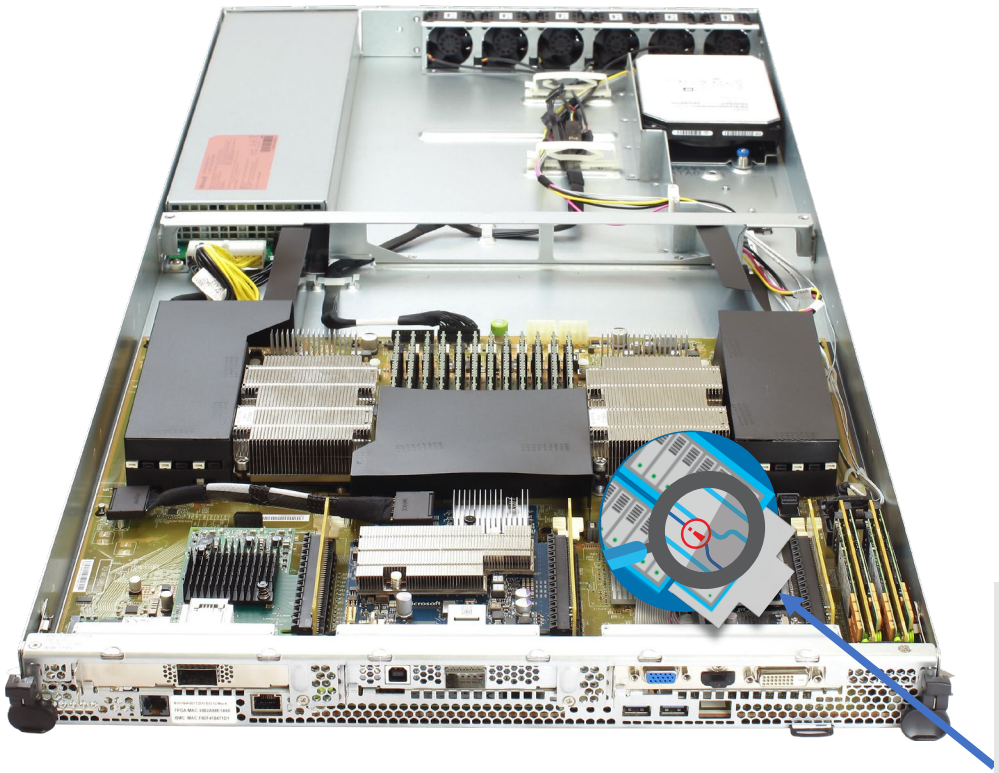

BIOS
BMC
NIC
FPGA
SSD
Option ROMs
GPU's
HBA's
Etc…

If you Own the firmware,

…You Own the server,

And you Own the cloud…

…And no one will find you…

The Hardware Threat is real !

Gives attackers full control

Getting weaponized (read: easy)

Hard to detect

Hard to remediate

The Cloud Firmware Threat Vectors

Vectors:

- Internet (Compromised customer, or malicious)
  - Hypervisor compromise
  - Bare Metal Services
- Insiders (Compromised or malicious)
  - Logical & physical access to hardware
- Supply Chain
  - Source of hardware

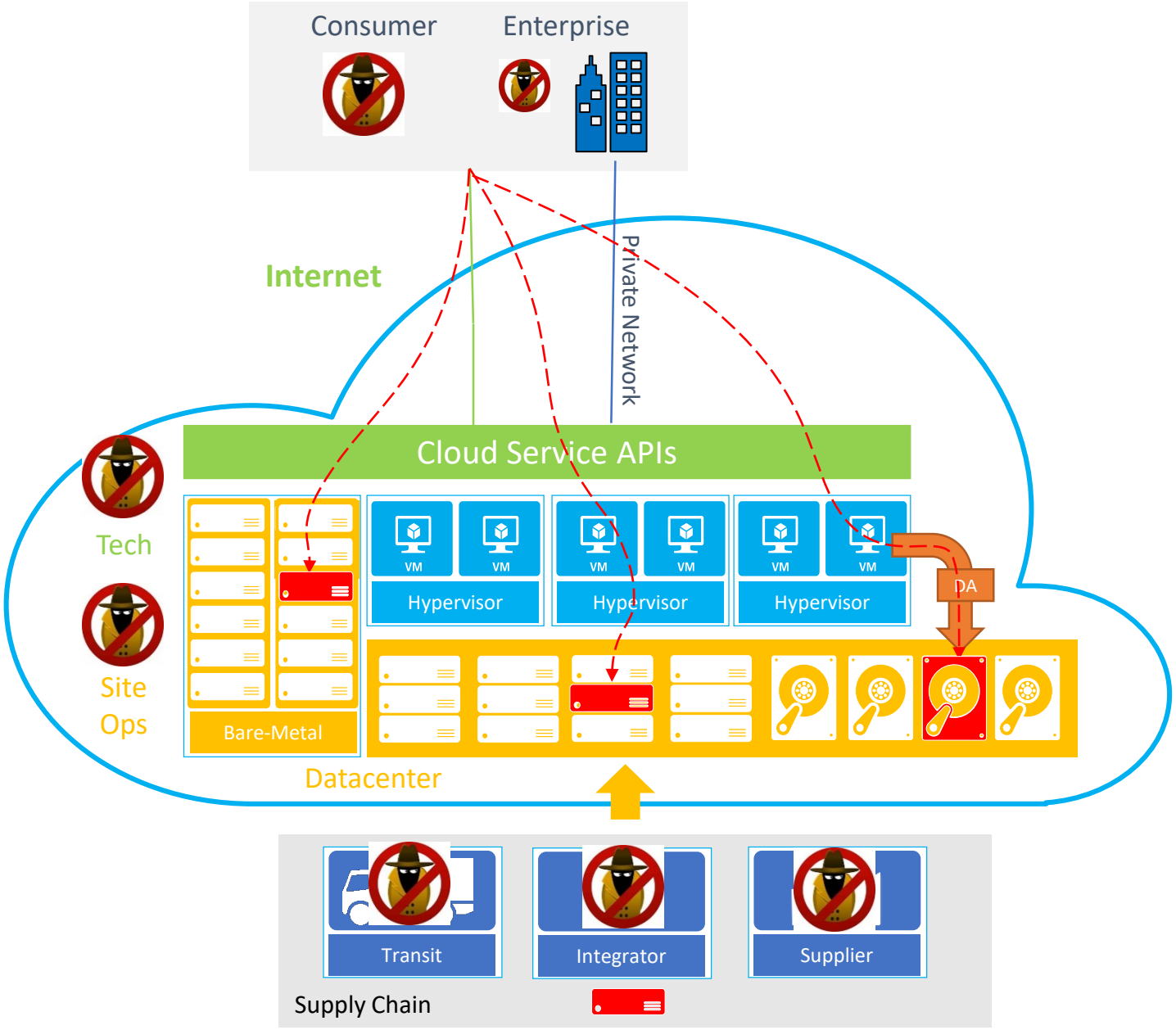

So, what can an attacker do?

Exploit a run-time firmware vulnerabilities

- Firmware **quality** is critical (reduce chances of run-time exploitability)
  - Follow secure development practices & Issue security updates with a proper SLA

- Assume breach and implement **defense In depth**
  - Component compartmentalization & limit the damage & reach of possible breaches

Persist rogue firmware

- Modify firmware to maintain ‘hold’ of the breached hosts (Survive even formats and OS re-installs)
- Servers need the ability to protect, detect and recover from such attacks

- This is what Cerberus is all about…

NIST 800-193 : Protect, Detect, Recover

PUBLICATIONS

SP 800-193

Platform Firmware Resiliency Guidelines

https://csrc.nist.gov/publications/detail/sp/800-193/final

Authenticate integrity of all firmware updates
Root(s) of trust & chain(s) of trust across the platform

Detect unauthorized access or corruption
Generate traces & events to help detect anomalies

Restore firmware to state of integrity
Automatic, Automatable and manual recovery scenarios

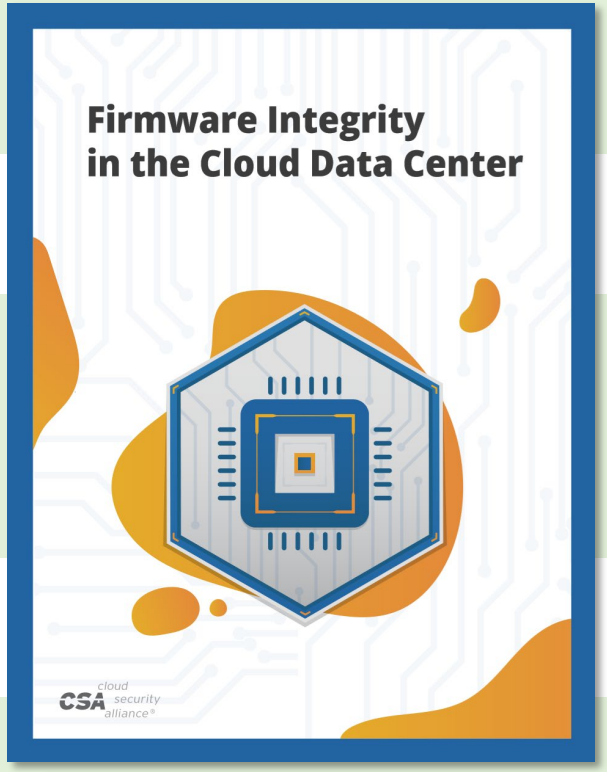

https://downloads.cloudsecurityalliance.org/assets/research/firmware/firmware-integrity-in-the-cloud-data-center.pdf

The Current State of Industry Servers

- **UEFI** – limited protection
  - Secure-boot-like functionality
  - No Detect or Recover
  - Platform dependent

- **BMC** - typically unsecure
  - No protect, no detect, no recover
  - No reliable attestation
  - E.g. [BlackHat Talk]

- **Peripherals** - Ad-hoc, usually limited
  - No protect, detect, recover
  - Not chained to platform RoT

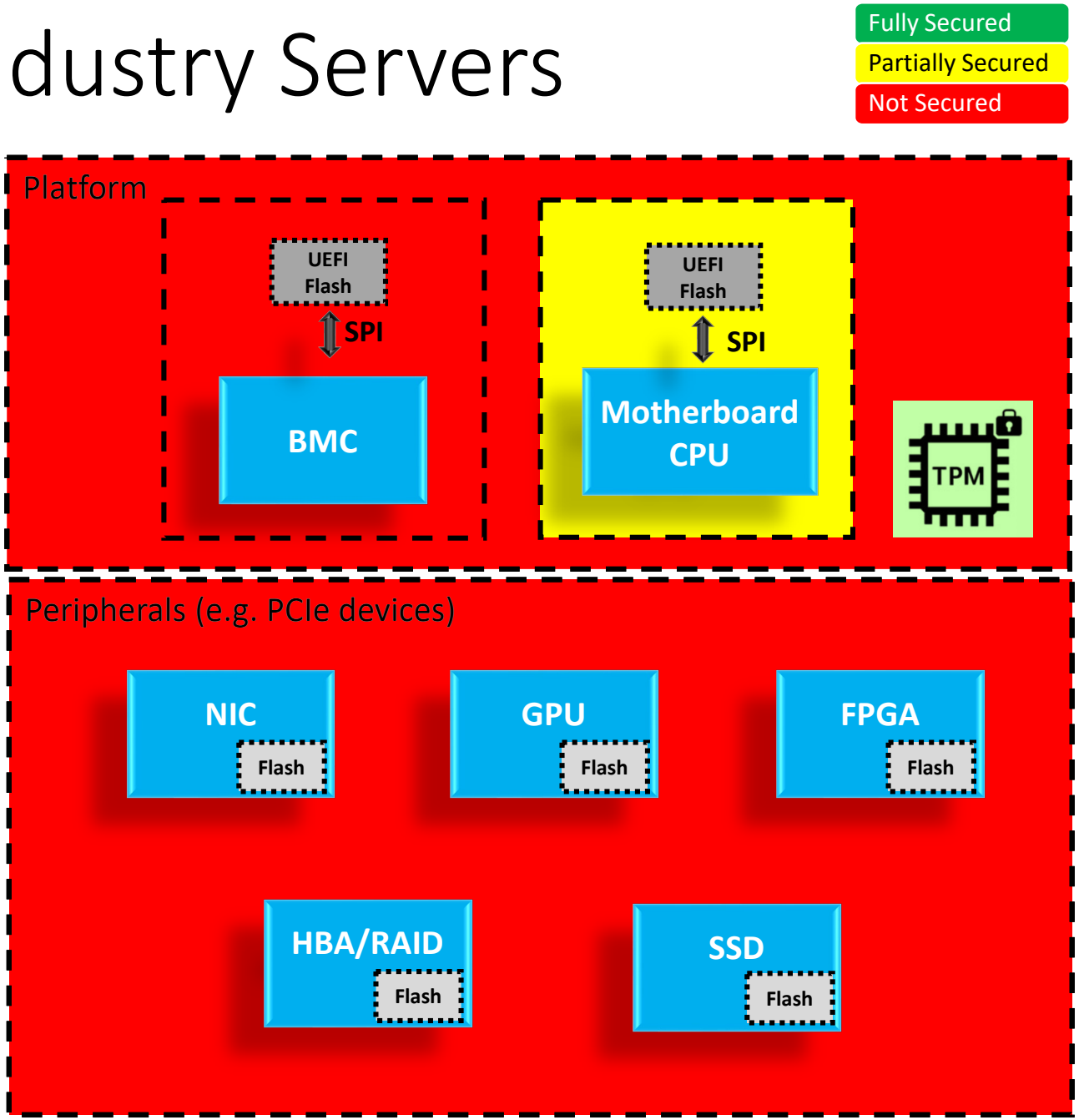

Introducing Project Cerberus

1. A set of **platform requirements**
   - E.g. Power sequencing while establishing trust
2. A set of **requirements** for ensuring **firmware integrity**
   - E.g. how to verify firmware integrity at boot
   - E.g. how to verify firmware signatures during updates
3. A **chip** that helps you implement the requirements

What is the Cerberus Chip?

- Dedicated security microprocessor
  - Internal Secure SRAM, Flash.
- Contains crypto acceleration blocks
  - SHA / AES / TRNG / PKA
- Interpose SPI/QSPI filter interface
- e-fuses for authentication public key hash and manifest revocation
- Hardware Physically Unclonable Function (PUF)
- Device Identifier Composition Engine (DICE)
- Tamper resistance

Interpose Interface

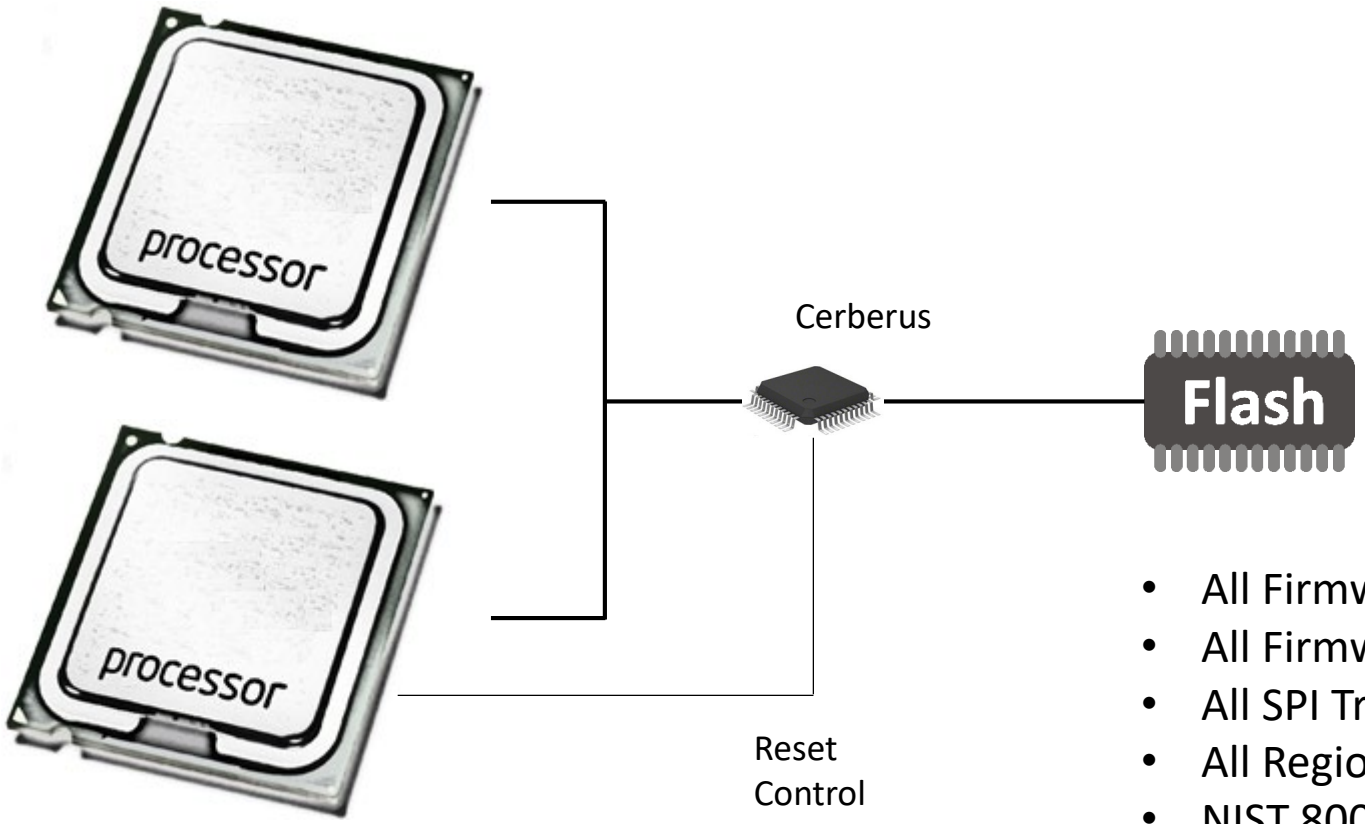

- All Firmware Authenticated
- All Firmware Measured
- All SPI Transactions Filtered
- All Region Access Controlled
- NIST 800-193 Enforced (Protect, Detect, Recover)

Protection

- Runtime: All flash accesses filtered through Cerberus
- Enforces region protection.
- Authenticated updates only
- Maintains Platform Firmware Manifest (PFM) for digital signature verification

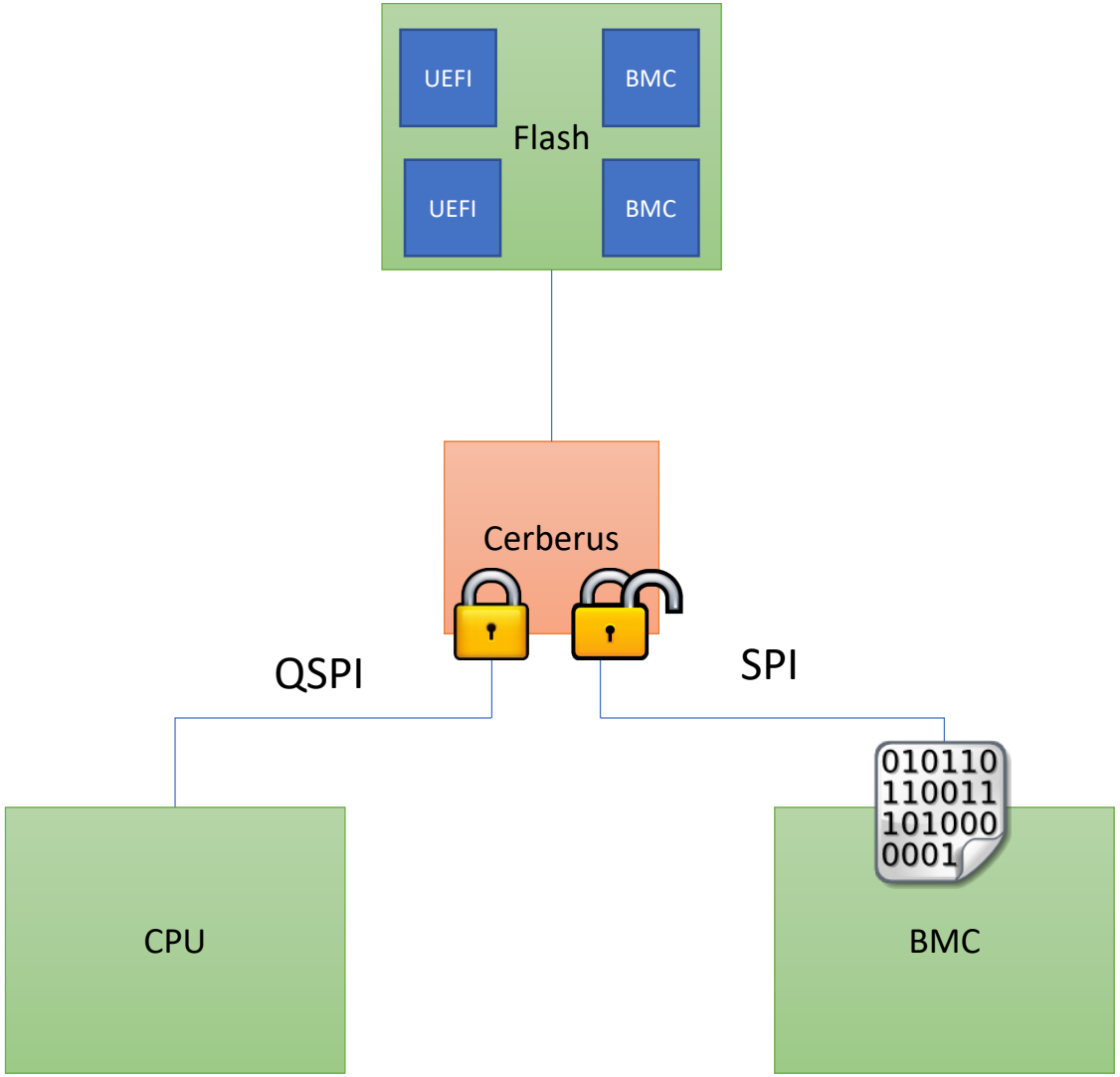

Detection

- Pre-boot: Firmware integrity with digital signature enforcement
- Pre-boot attestable Firmware measurements, with freshness seed.
- Post-boot firmware integrity checks
- Post-boot attestable Firmware measurements with freshness seed.

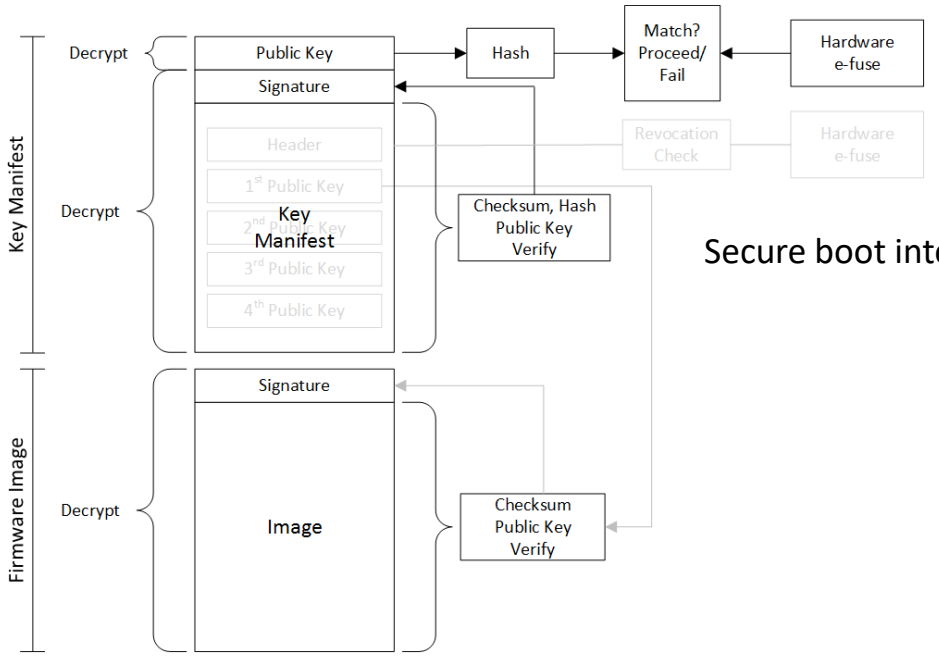

Secure boot integrity checks

Device Identifier Composition Engine

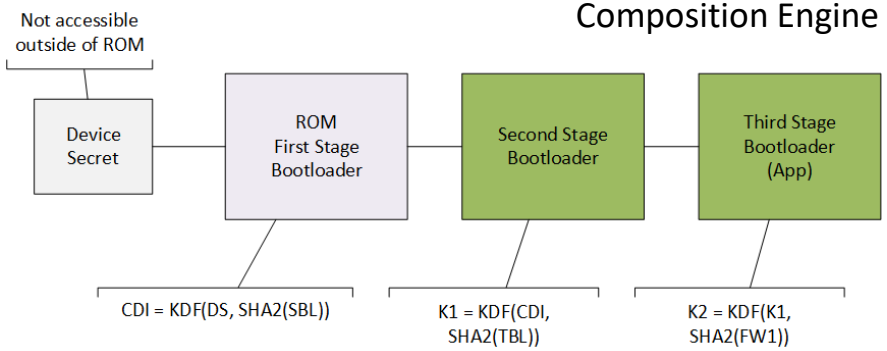

Recovery

- Policy based Recovery
- Bare-metal recovery images locked in flash
- Flash access protected by Cerberus
- Automatic recovery workflow on detection of corruption

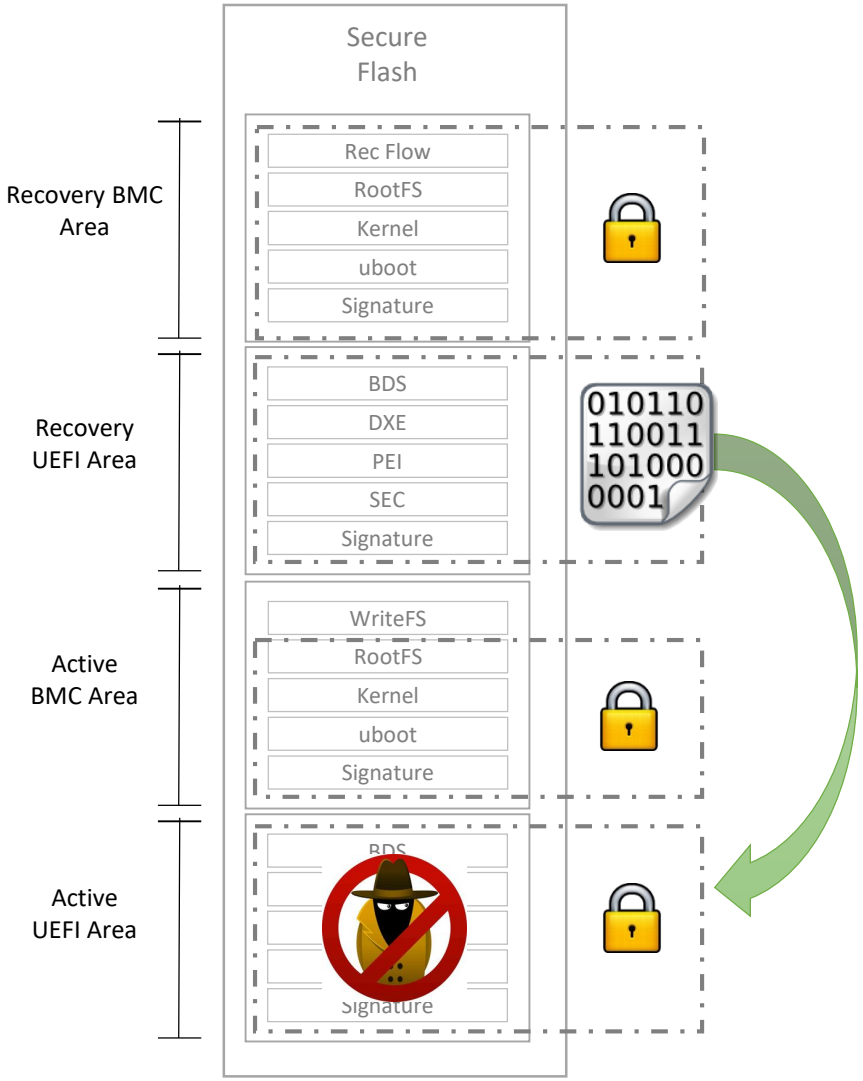

Platform Trust Hierarchy

- Scalable security architecture
- Motherboard contains master RoT.
- Each peripheral has a slave RoT capabilities interposed or native
- NIST 800-193 principles enforced at each level
- Master attests to platform firmware integrity

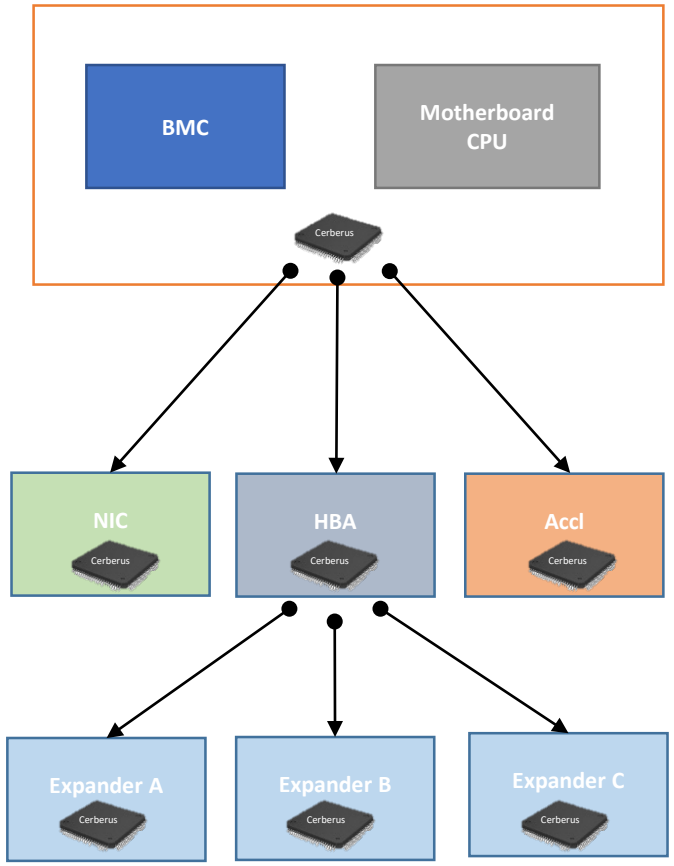

Open Compute Security Project

- Charter & doc links : https://www.opencompute.org/wiki/Security
  - In a nutshell : Creating open specs for ensuring firmware integrity of an OCP platform

- Current areas of focus (working on specs)
  - Scoping the security threats
  - SecureBoot
  - Attestation

- Haven’t started yet
  - Secure Updates
  - Recovery
  - Hardware interfaces

- We meet weekly. You’re welcome to join!

Key Takeaways

- Cerberus is Microsoft’s RoT for Hardware
  - Implementation & designs open sourced to OCP
- You’re welcome to join the OCP Security workgroups
  - We can use your help!
- Don’t forget that firmware integrity is not the whole story
  - Firmware **quality** & **defense in depth** are critical too

OCP SUMMIT

October 1-2
2018
Amsterdam

OPEN. FOR BUSINESS

Cerberus Deconstruct

- Power on sequence
- Cerberus boot
- Cerberus attestation
- Platform boot
- Platform attestation
- Cerberus Provisioning

Power-On Sequence

- When power is applied, Cerberus powers first!
- Cerberus holds CPU and BMC in reset, they cannot access flash so holding them in reset is just a graceful thing to do.
- After Cerberus completes BMC flash digital signature verification, it allows flash access and releases reset.
- Cerberus communicates with peripherals for attestation measurements.
- After Cerberus completes BMC flash digital signature verification, it allows flash access and releases reset.

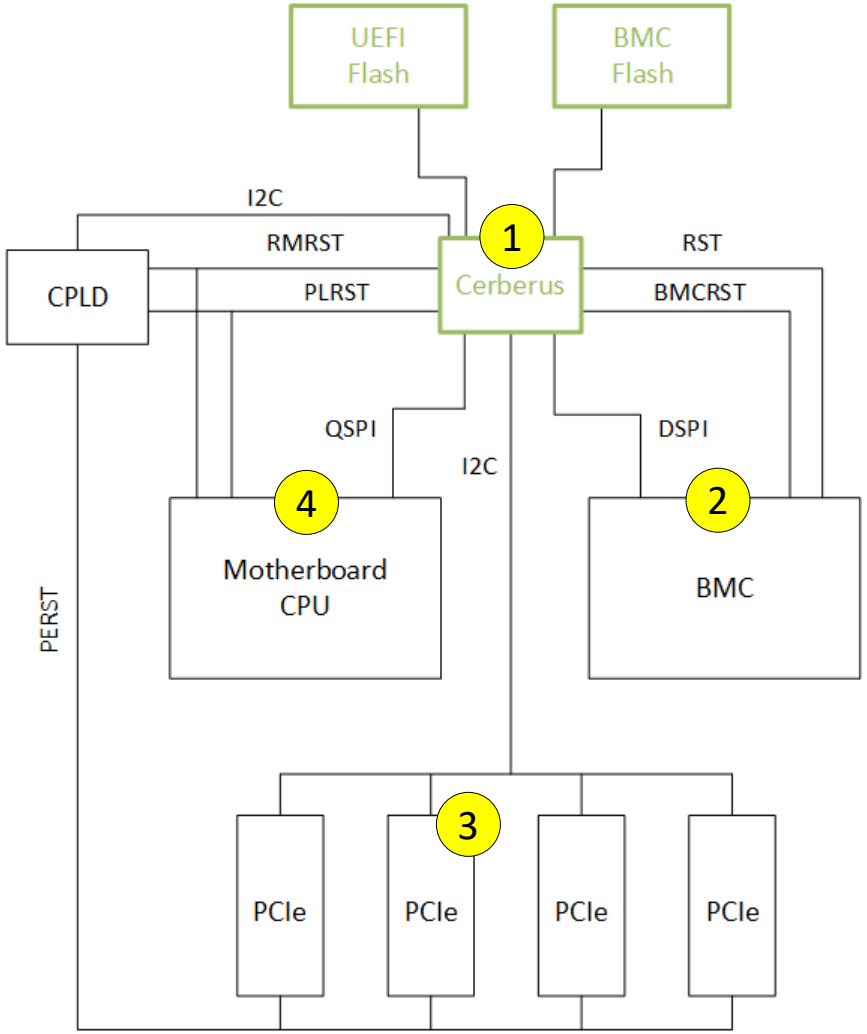

Cerberus Boot

- Immutable ROM authenticates key manifest (mutable code).
- ROM selects key from Manifest and authenticates RIoT Core layer.
- ROM calculates CDI of Manifest and RIoT Core
- ROM launches and passes control to RIoT Core, passing CDI.
- RIoT Core selects key from Manifest and authenticates Cerberus application firmware.

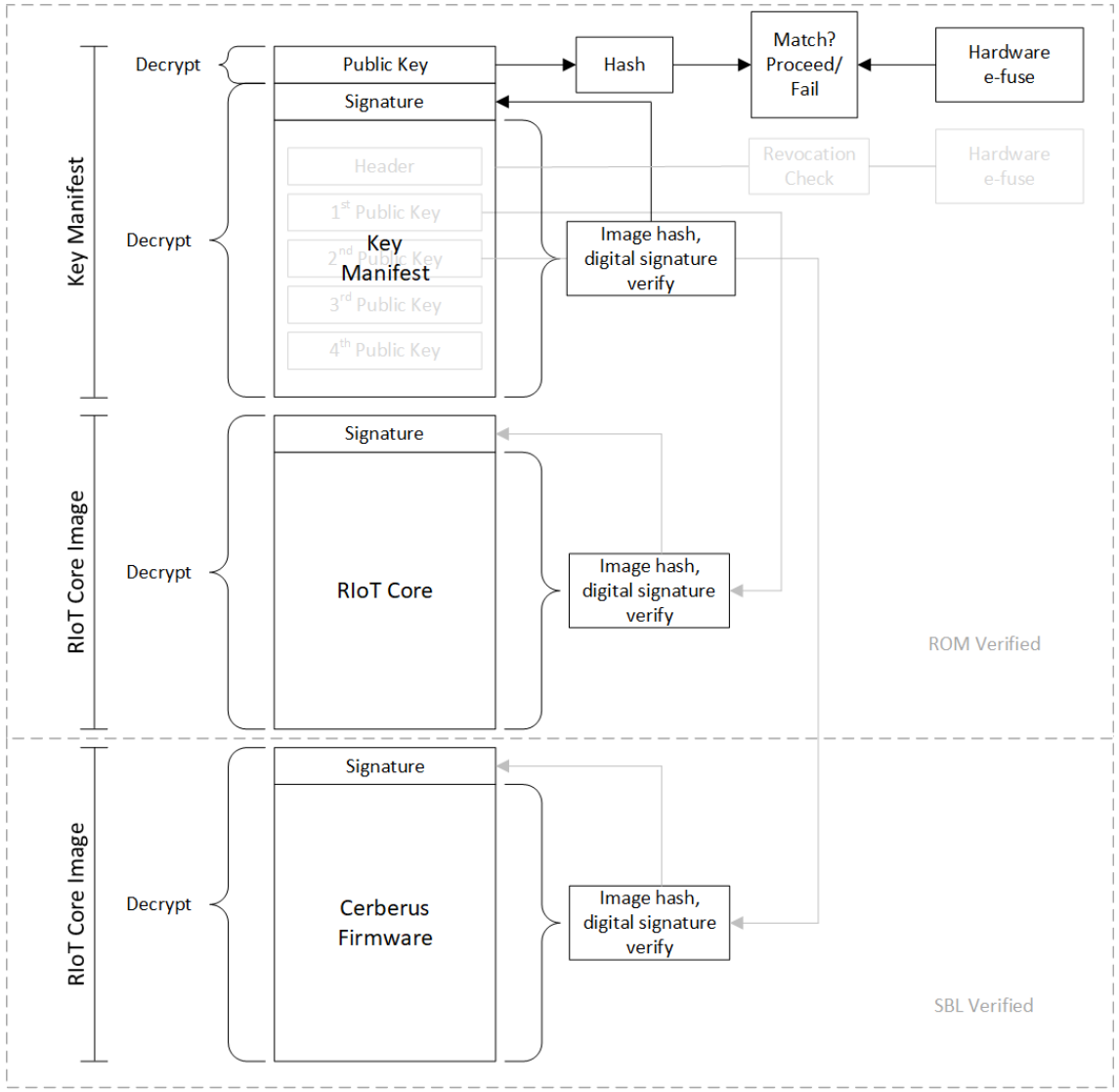

Cerberus Boot Continued (RIoT Core)

- ROM calculates CDI using Manifest and RIoT Core measurement
- ROM passes CDI to RIoT Core
- RIoT Core generates asymmetric Device ID key from CDI and Alias key from CDI and digest form FSD of Cerberus FW.
- Device Id Public key is provided to Cerberus Application Firmware
- Device Id Certificate and Alias Certificates are generated
- Alias Certificate is signed by Device Id key.
- If Device Id Certificate has not been signed, CSR is generated resulting in Device Id Certificate being CA signed during provisioning.

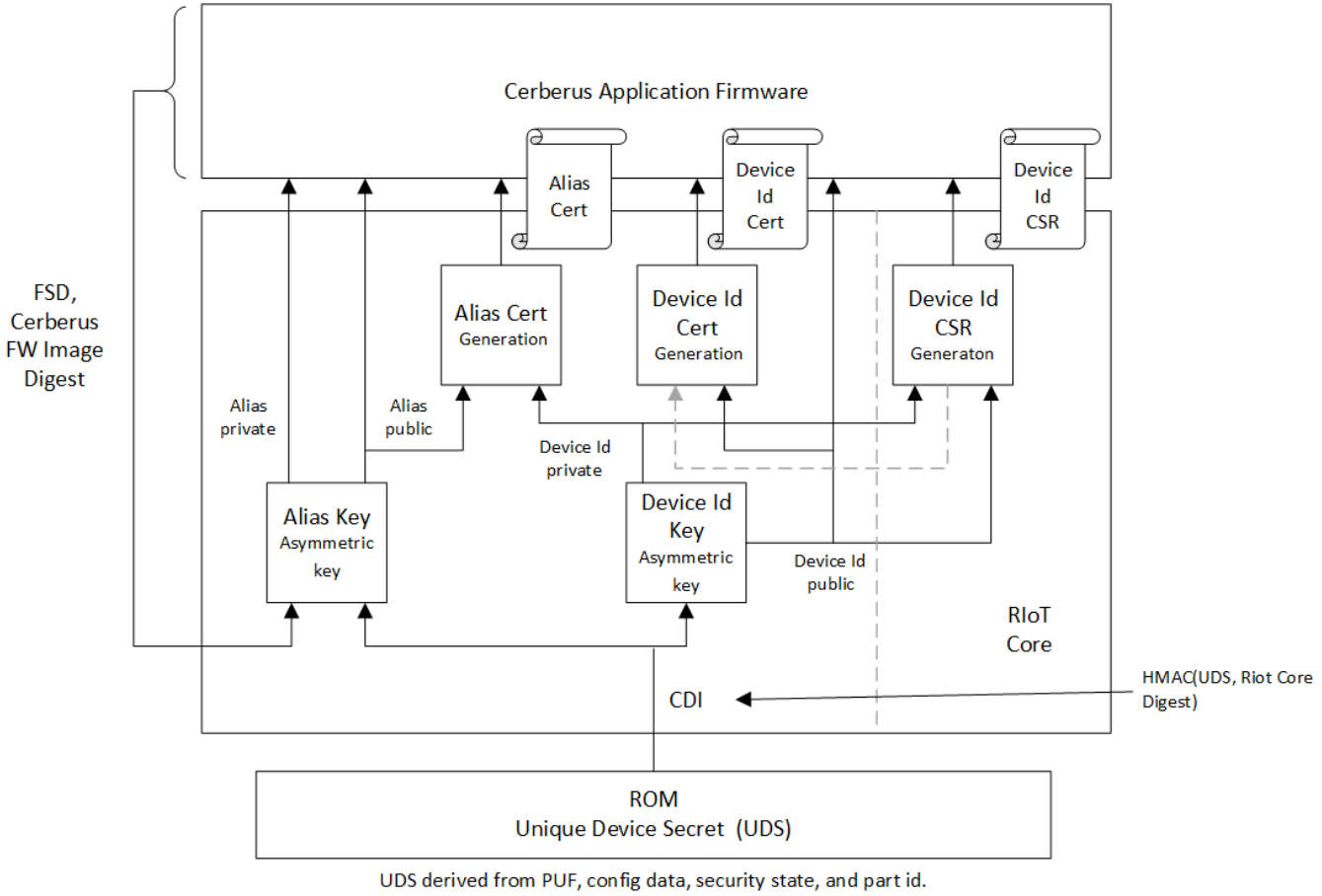

UDS derived from PUF, config data, security state, and part id.

Cerberus - Platform Firmware Manifest (PFM)

- Describes firmware attributes of protected device:
  - RO flash descriptor offsets
  - RW flash descriptor offsets
  - Versions and version index
  - Digest of code blocks
  - Public Certificate for verification
- Cerberus uses PFM to verify flash content
- PFM describes supported firmware images.
- PFM is a signed update to Cerberus application firmware.


```
<Firmware version="1.01.0">
    <VersionAddr>0x00FF004B</VersionAddr>
    <ReadWrite>
        <Region>
            <StartAddr>0x00EA0000</StartAddr>
            <EndAddr>  0x00FEFFFF</EndAddr>
        </Region>
    </ReadWrite>
    <SignedImage>
        <PublicKey>
        -----BEGIN PUBLIC KEY-----
        MIIBIjAIMAhDNzXoifD6yQEFAAOIMAhDNzXoifD6yQEAx+Y05PThU4AbodORMVLj
        JNZZFB99bsW9oUr+U4Ugfrog//kf825xzKEdZIMIMAIMAhDNzXoifD6yX0IMAhDN
        8E+8nQesKtHivc72IMAhDNzXoifD6y1VGBol/MvIMAhDNzXoifD6y0syy+/2Ke16
        1yFMKkmWfH8IMAhDNzXoifD6yzmJzFiEy4Bnas+npwWTIxmcWraN7uQsyPfOyTGs
        E3M8r115B0u517pA/SEIMAhDNzXoifD6yM0QmOkaJA+vkWwyxlUlX/sm2cqboBeK
        v9N+P5DpnpZXVWXb/BuC8GkI6iDEFWm/dcoOzIMAhDNzXoifD6yEYVNBcjqUL1O6
        ZQIDAQAB
        -----END PUBLIC KEY-----
        </PublicKey>
        <Signature>
        8e5c726fb6b8e5c726fb6bb4e32afcaaa1078cfe00b1ec31d82b530e16
        7f4a6d953bef1563a2272a4b63eedeeb32b3beb4e2cacdf027fd95f086c5
        e048d62e015f48e5c726fb6bbr999c931d7c46a4d6b87d7a7739a9461eb1
        fc652a2e1ba3dcd69832e9c16ba90944ac799883b1e0a1f2f16763330d03
        2d46f7d9892d5739f78e5c726fb6b6893a8e5c726fb6bb2c538621f5baf6
        39191dbf5e593a93fa2b417750fbd6b997f25d268e5c726fb6bbdaeff601
        2bcca3338a2b8e5c726fb6bbb308e5c726fb6bbc4aa1b7f632d58e5c7269
        66a810e41cd6563b0139cd8e5c726fb6bb6fb6bb9618c0a8e5c726fb6bb2
        3c727dbd148e5c726fb6bb8806668733
        </Signature>
        <Region>
            <StartAddr>0x00000000</StartAddr>
            <EndAddr>0004FFFF</EndAddr>
        </Region>
        <Region>
            <StartAddr>0x00050000</StartAddr>
            <EndAddr>0x00C4FFFF</EndAddr>
        </Region>
        <Region>
            <StartAddr>0x00C50000</StartAddr>
            <EndAddr>0x00E9FFFF</EndAddr>
        </Region>
        <Region>
            <StartAddr>0x00FF0000</StartAddr>
            <EndAddr>0x00FFFFFF</EndAddr>
        </Region>
        <ValidateOnBoot>true</ValidateOnBoot>
    </SignedImage>
</Firmware>
```

Cerberus - BMC Verification

- PFM describes FW digest structure
- PFM declares read-only, read-write regions
- Cerberus verifies digital signature of image on flash matches PFM
- Measurement extended for attestation.
- Cerberus SPI filter enforces runtime region protection
- Flatten Image Tree (FIT) permitted for secure boot extending.
- UEFI and other components protected in the same way.

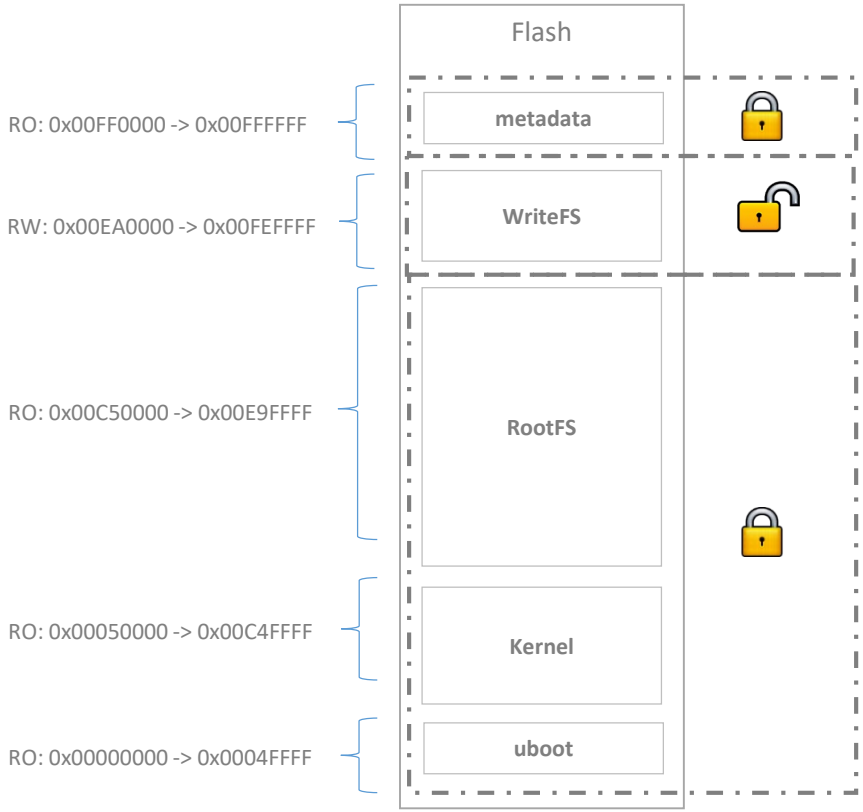

Cerberus - BMC Golden Recovery

- Cerberus detects image integrity corruption
- If BMC restored from backup flash
- Always recoverable, Cerberus can internally stores BMC recovery uboot.
- Golden uboot performs NFS FIT secured Linux boot

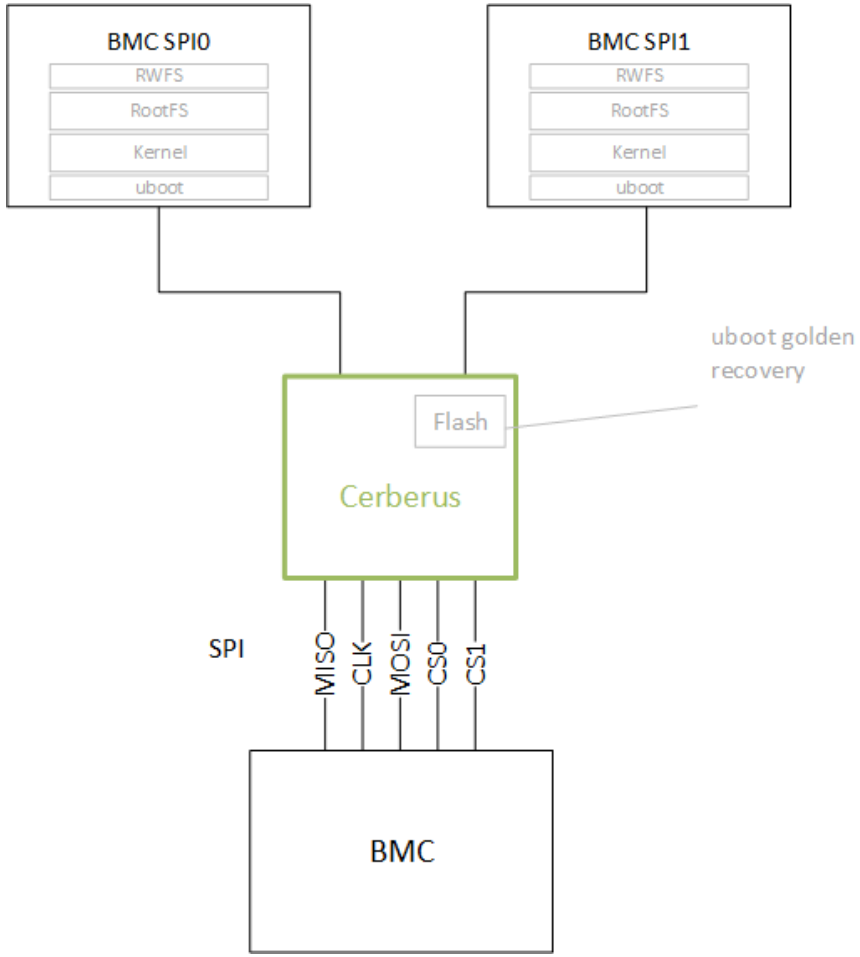

Revocation

- Platform Firmware Manifest (PFM) are forward only.
  - PFM ID defined as uint64, does not permit rollback.
- PFM enforcement is function of the Cerberus firmware.
  - Soft revocation
- PFM is signed with key from key manifest.
- Key manifest can be hard revoked, using OTP memory and manifest ID

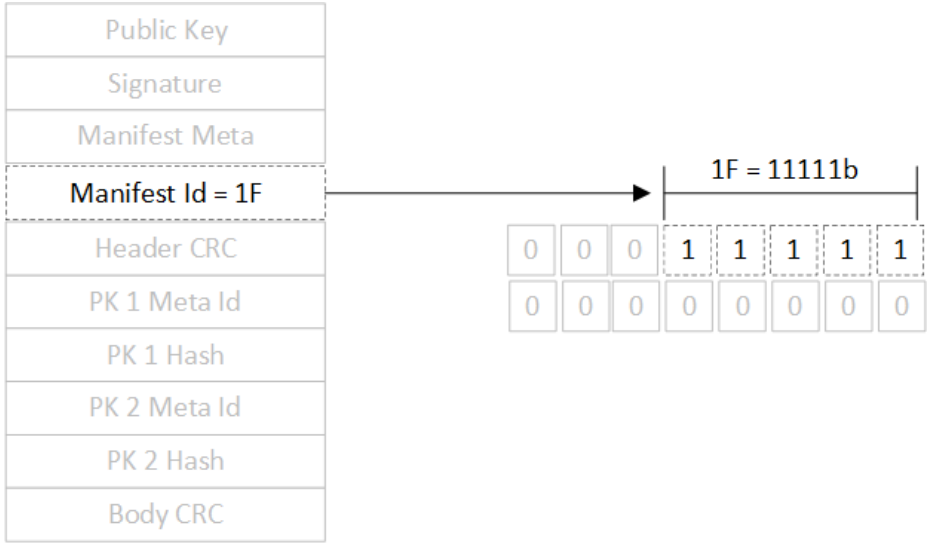

Cerberus Attestation Policies

- In-band attestation
  - SPI to Cerberus
  - KCS bridged through BMC to Cerberus
- Out Of Band (OOB) attestation
  - Ethernet bridged through BMC to Cerberus
- Policies can be set on Cerberus for remediation
  - Recovery
  - Power Control

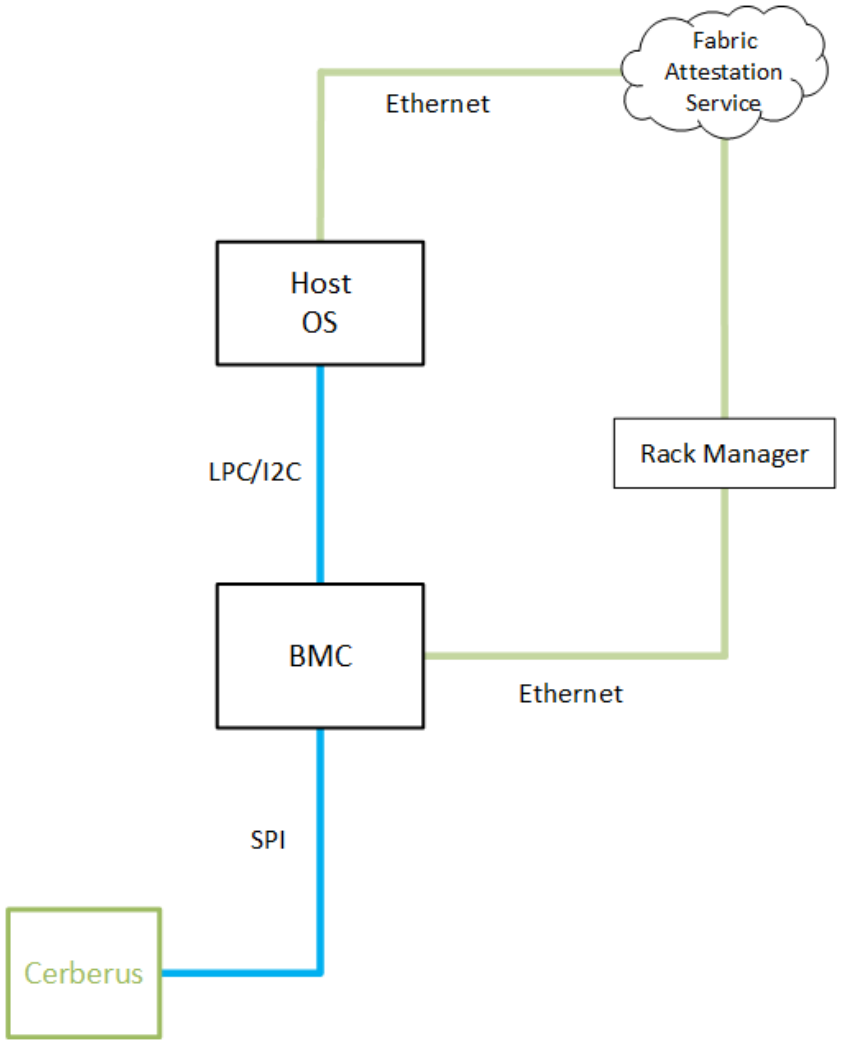

Cerberus – Security Controller

Guided by NIST, enforces firmware integrity Protection, Detection and Recovery.

Cryptographic microcontroller enforces digital signatures on all platform firmware modules.

Hierarchical Root-of-Trust topology, provides attestation for all firmware modules

Opened the design

Security Project Committee in OCP

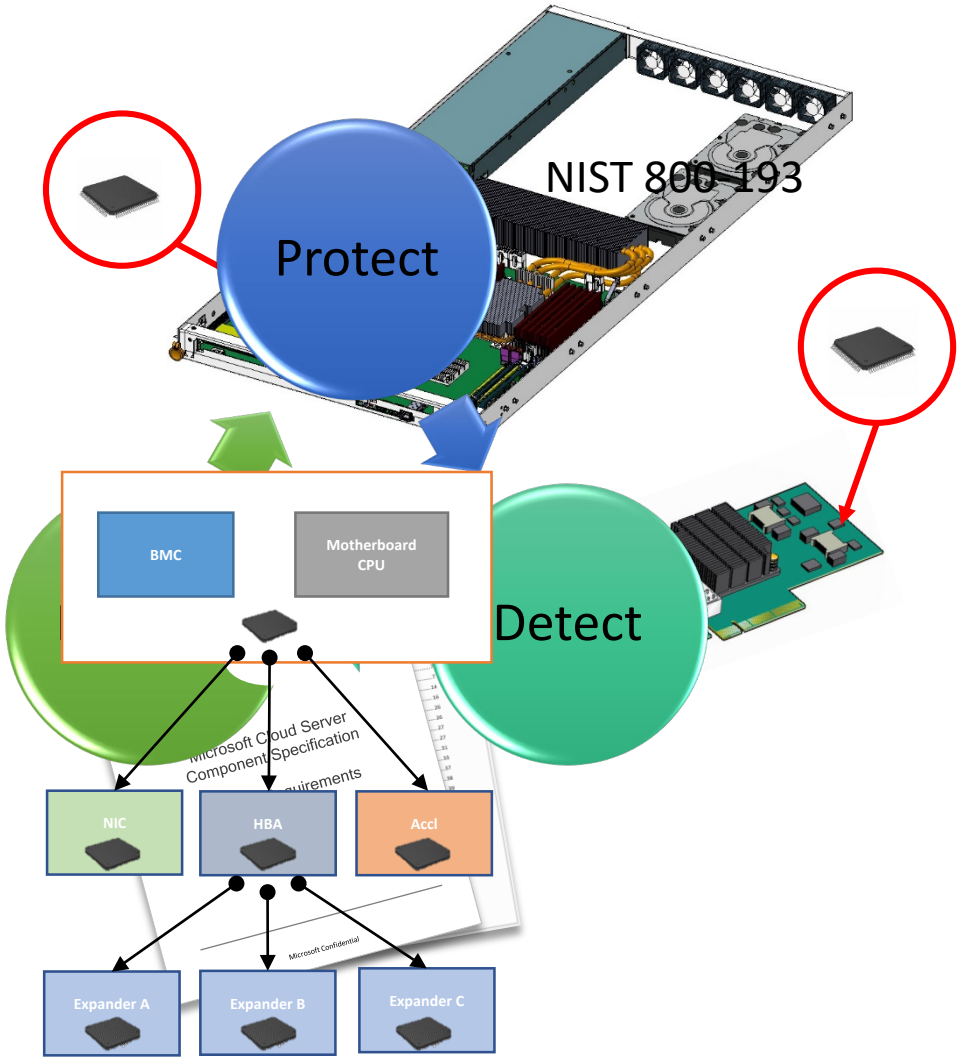

Open Compute Project

- Founded in April 2011 by Facebook
- Microsoft joined in January 2014
  - Shared collateral for Open Cloud Server
  - Optimized for cloud scale and density
  - Contributed design was fully complete ☹
- October 2016 Microsoft announced Project Olympus
  - Design was 70% complete
  - Attempting Open Source Server Hardware
- Community contributed to the design taking it to 100% complete – something never attempted before in OCP.

Open Cloud Server

Project Olympus

Project Olympus

- Community feedback incorporated into the solution
- System and Rack design
- Manufacturing collateral schematics and board files open sourced
- Open Firmware: Open EDKII, OpenBMC and Open PDU and Rack Manager

Open Source Momentum. . .

More Open Building Blocks Followed

HDD Storage

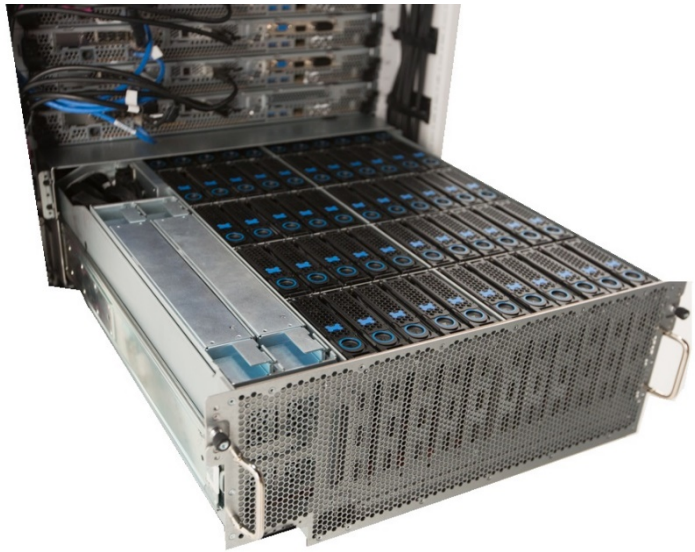

Flash Storage

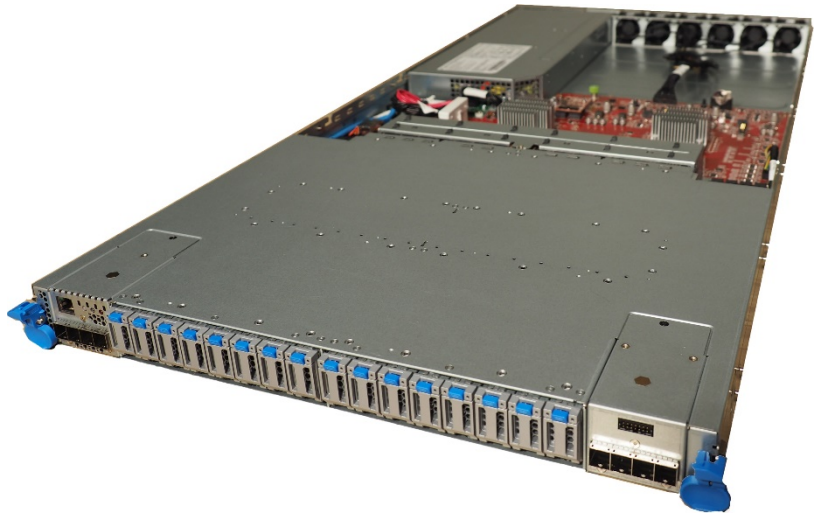

GPU / PCIe